5E3MM Deluxe Micro Mod

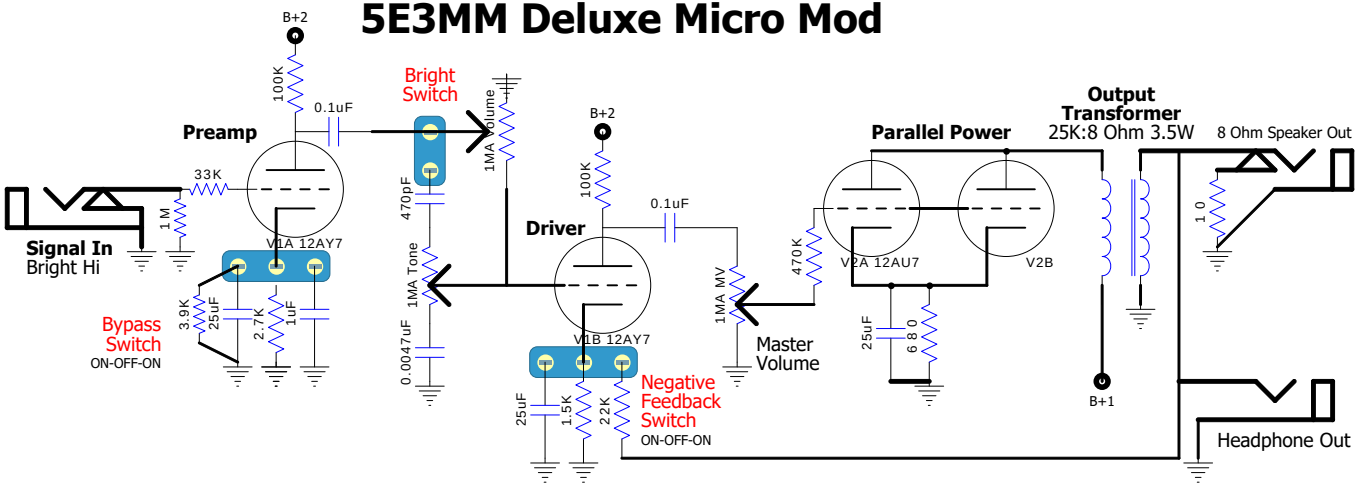

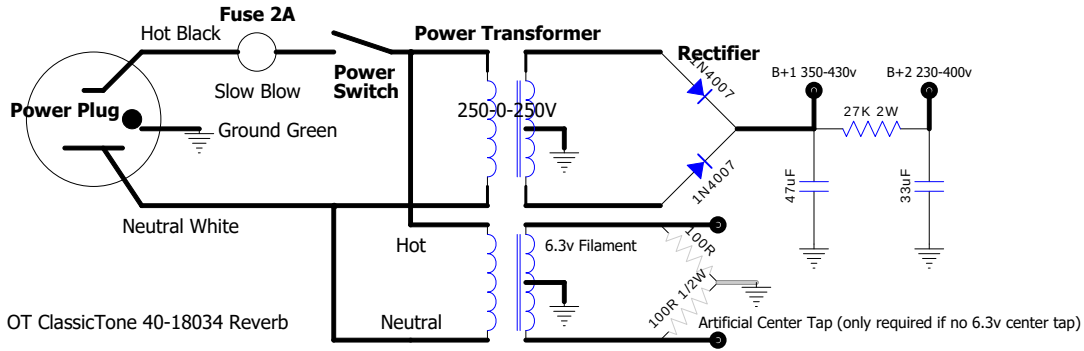

OT ClassicTone 40-18034 Reverb

V2.1 designed by Rob Robinette